USB

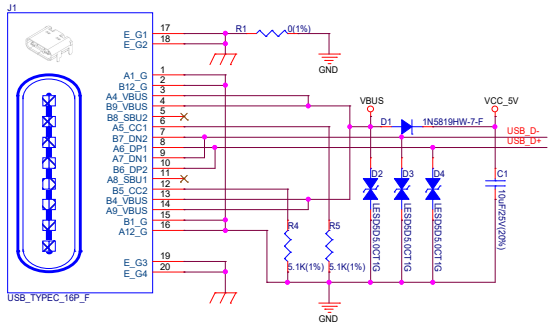

Power Regulator

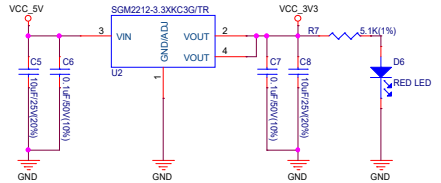

ESP32-S3-MINI-1

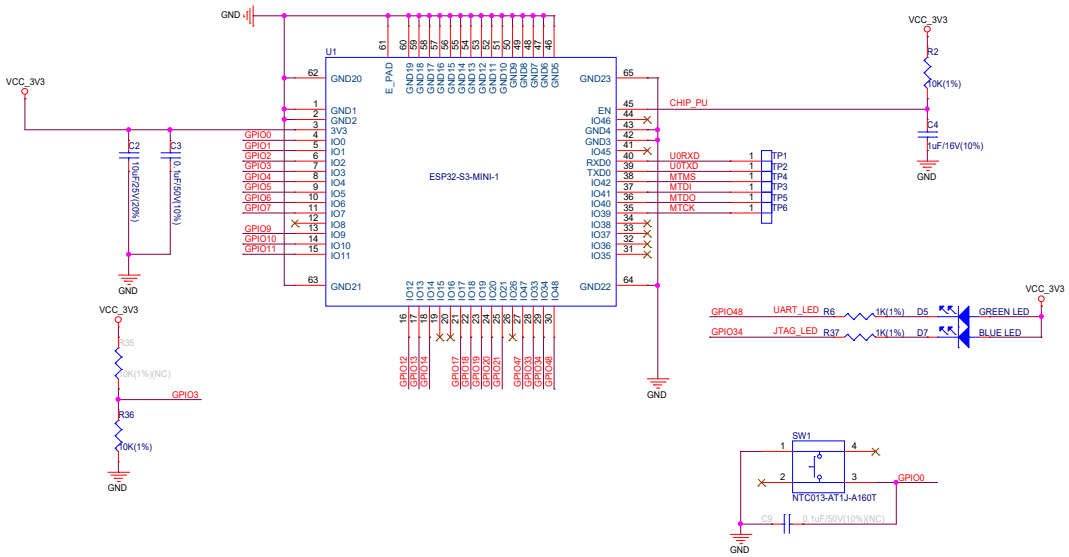

JTAG/Prog Connectors:

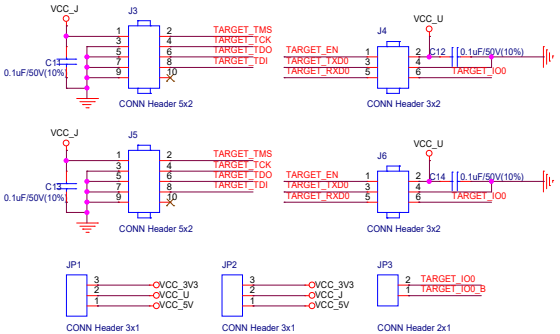

BOOT

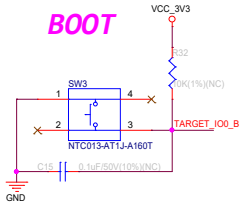

RESET

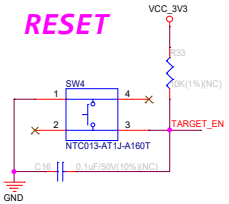

ESP32-S3 IO Assignment:

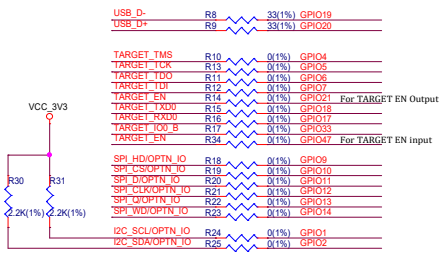

Extend Connectors:

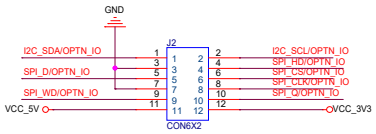

NC: No component.

ESPRESSIF

乐鑫信息科技（上海）股份有限公司

Title	ESP-Prog-2		
Size C	Page Name <02_ESP-Prog-2>	Rev 1.2	Confidential and Proprietary
Date: Monday, January 13, 2025		Sheet 2 of 2	