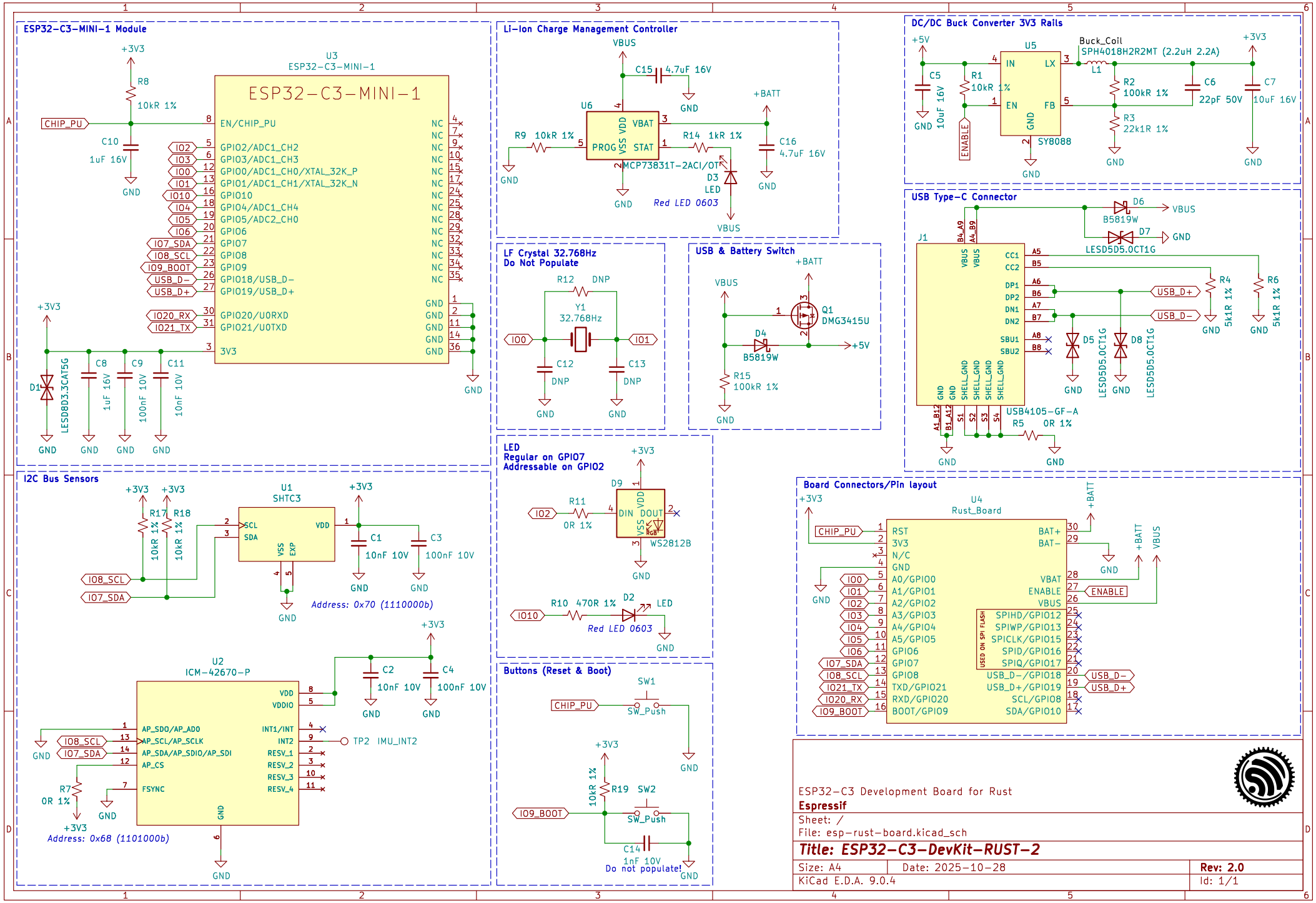
ESP32-C3-MINI-1 Module
U3
ESP32-C3-MINI-1
ESP32-C3-MINI-1
EN/CHIP_PU
GPIO2/ADC1_CH2
GPIO3/ADC1_CH3
GPIO0/ADC1_CH0/XTAL_32K_P
GPIO1/ADC1_CH1/XTAL_32K_N
GPIO10
GPIO4/ADC1_CH4
GPIO5/ADC2_CH0
GPIO6
GPIO7
GPIO8
GPIO9
GPIO18/USB_D-
GPIO19/USB_D+
GPIO20/U0RXD
GPIO21/U0TXD
3V3
Li-Ion Charge Management Controller
U6
MCP73831T-2ACI/OT
Red LED 0603
DC/DC Buck Converter 3V3 Rails
U5
SY8088
Buck_Coil
SPH4018H2R2MT (2.2uH 2.2A)
USB Type-C Connector
J1
USB4105-GF-A
B5819W
LESD5D5.0CT1G
LF Crystal 32.768Hz
Do Not Populate
Y1
32.768Hz
USB & Battery Switch
Q1
DMG3415U
LED
Regular on GPIO7
Addressable on GPIO2
D9
WS2812B
Red LED 0603
I2C Bus Sensors
U1
SHTC3
Address: 0x70 (1110000b)
U2
ICM-42670-P
Address: 0x68 (1101000b)
Buttons (Reset & Boot)
SW_Push
Do not populate!
Board Connectors/Pin layout
U4
Rust_Board
ESP32-C3 Development Board for Rust
Espressif
Sheet: /
File: esp-rust-board.kicad_sch
Title: ESP32-C3-DevKit-RUST-2
Size: A4
Date: 2025-10-28
Rev: 2.0
KiCad E.D.A. 9.0.4
Id: 1/1