System Block:

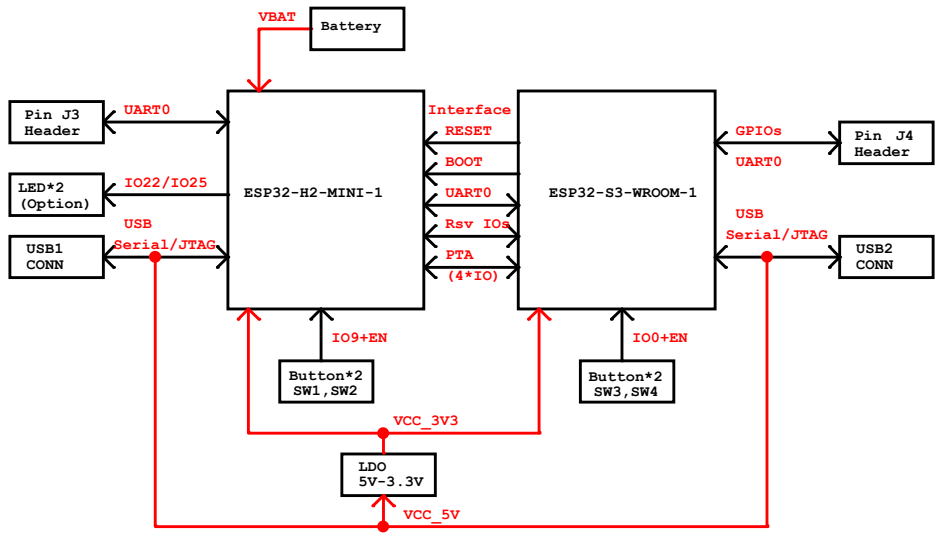

ESPRESSIF

乐鑫信息科技（上海）股份有限公司

Title	ESP-Thread BR&Zigbee GW		
Size C	Page Name <01_DesignBlock>	Rev V1.1	Confidential and Proprietary
Date: Tuesday, February 03, 2026		Sheet 1 of 2	

USB1 for ESP32-H2

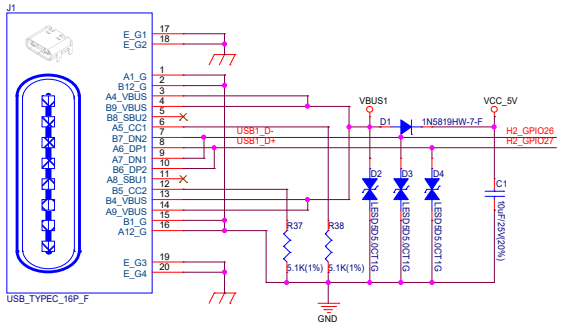

USB2 for ESP32-S3

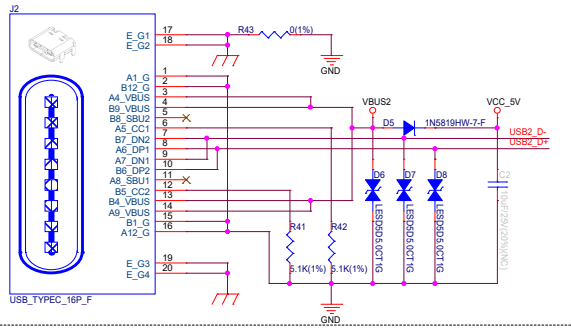

ESP32-H2-MINI-1

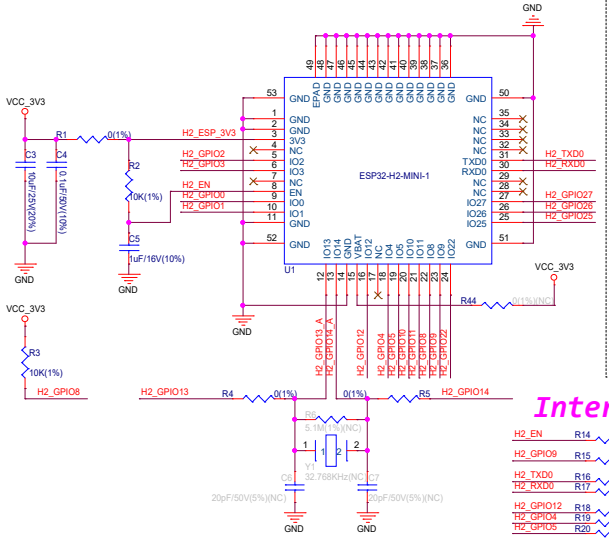

ESP32-S3-WROOM-1

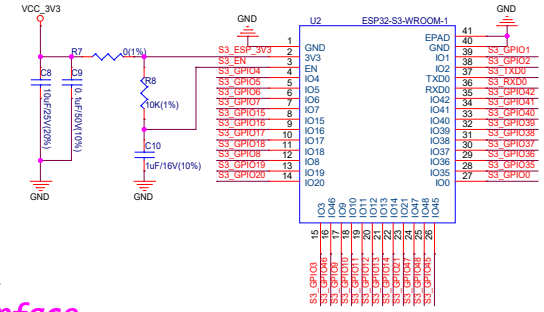

Interface

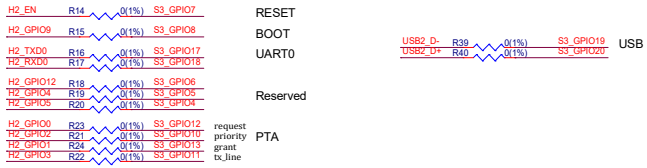

For ESP32-S3 (NC)

UART:

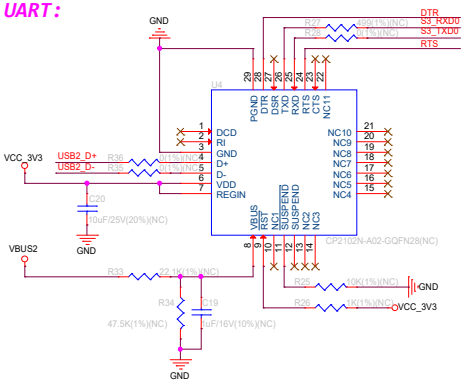

Auto Download:

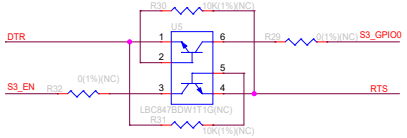

Buttons

For ESP32-H2

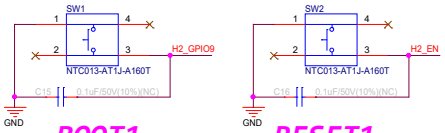

BOOT1 RESET1

BOOT2 RESET2

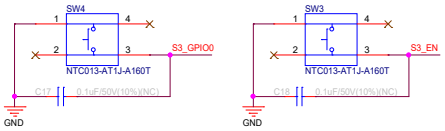

NC: No component.

For ESP32-S3

LEDs for ESP32-H2 (Option)

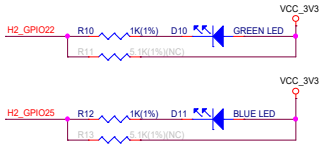

Power Regulator

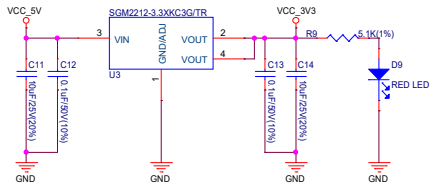

Pin Header For ESP32-H2

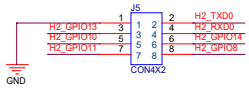

H2_GPIO13 and H2_GPIO14 is not available if using Y1 Xtal.

Pin header to fix sub-board; NC for default

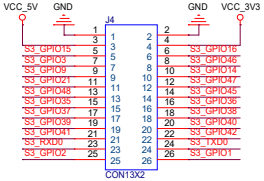

S3_GPIO35 and S3_GPIO36 are not available for ESP32-S3-WROOM-1-N8R8 and ESP32-S3-WROOM-1-N16R8.

For ESP32-S3

ESPRESSIF 乐鑫信息科技（上海）股份有限公司			
Title: ESP-Thread BR&Zigbee GW			
Size: C	Page Name: <02_ESP-Thread BR&Zigbee GW>	Rev: 1.2	Confidential and Proprietary
Date: Tuesday, February 03, 2026		Sheet 2 of 2	