System Block:

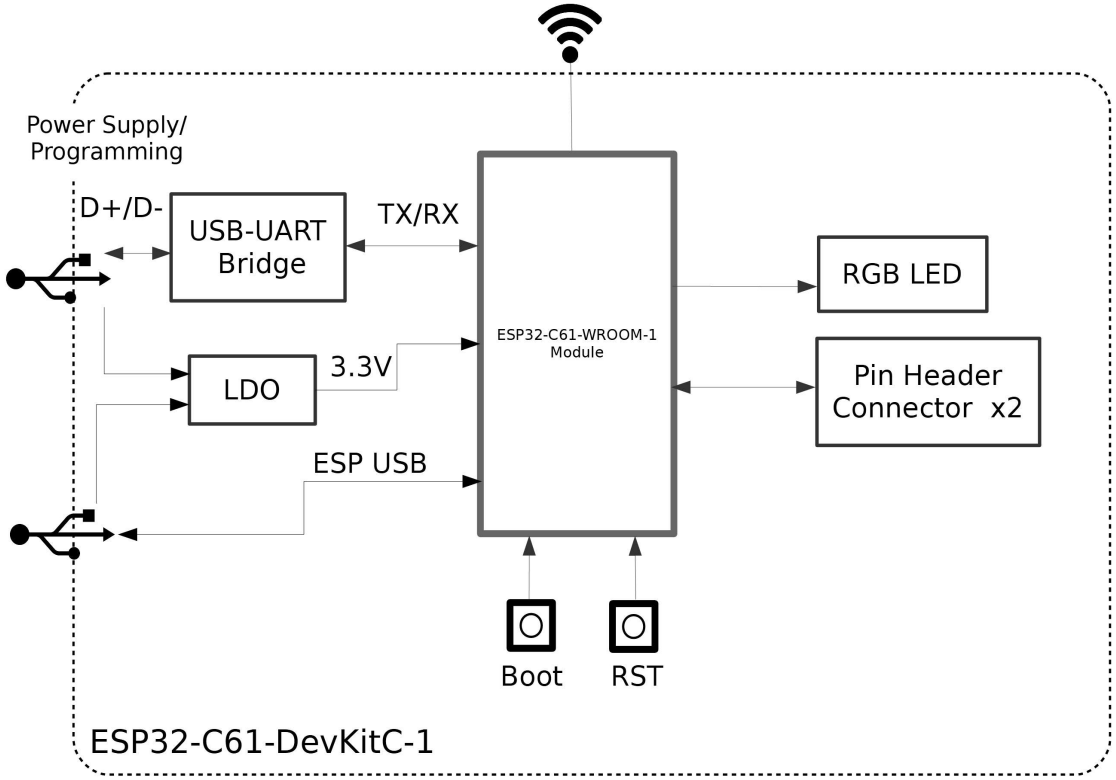

ESPRESSIF		
乐鑫信息科技（上海）股份有限公司		
Title	ESP32-C61-DevKitC-1	
Size C	Document Number 01 DesignBlock	Rev V2.0
Date: Thursday, April 17, 2025	Sheet 1 of 2	

USB to UART:

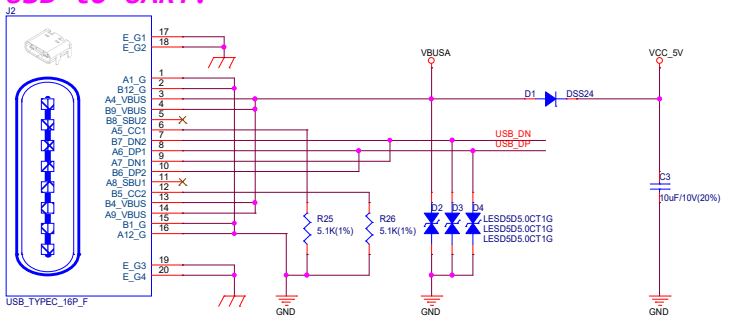

USB:

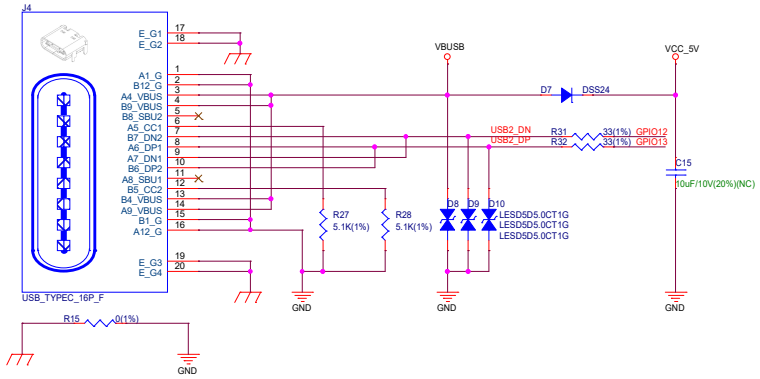

ESP32-C61-WROOM-1:

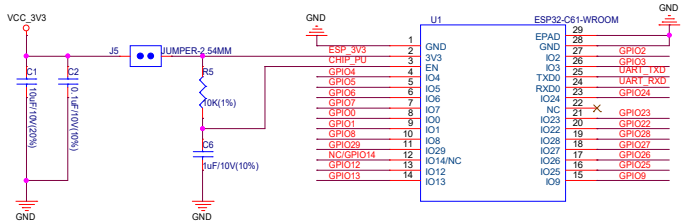

IO14 NC @ ESP32-C61 with PSRAM in the chip's package

Pin Header:

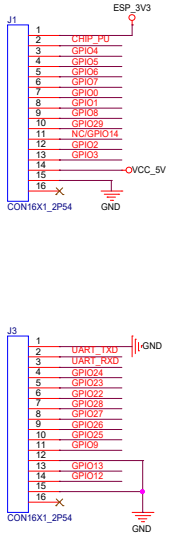

UART:

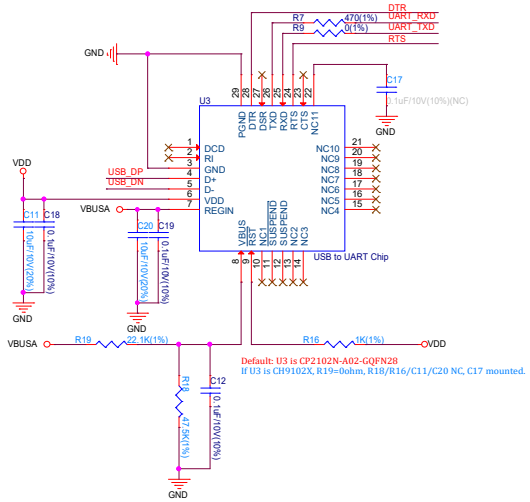

Auto Download:

Auto program

DTR	RTS	-->	EN	IO9
1	1		1	1
0	0		1	1
1	0		0	1
0	1		1	0

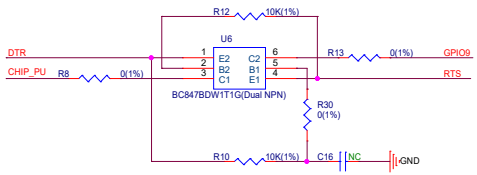

RGB LED:

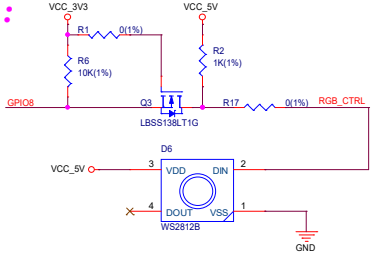

Power Regulator:

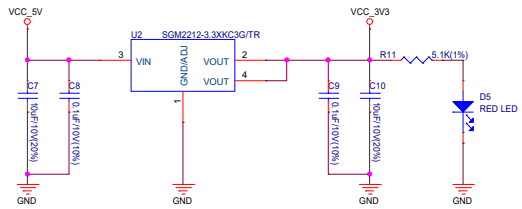

Boot Button:

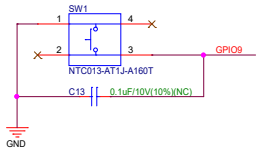

Reset Button:

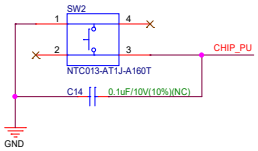

ESPRESSIF
乐鑫信息科技（上海）股份有限公司

Title	ESP32-C61-DevKitC-1	
Size C	Document Number 02 ESP32-C61-DevKitC-1	Rev V2.0
Date: Thursday, April 17, 2025	Sheet 2 of 2	